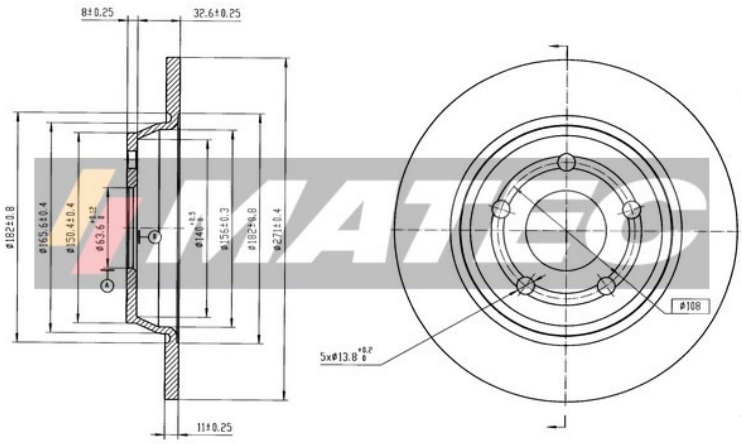

CD9022S **BRAKING**

Brake Discs

Description	B. DISC FORD
Availability	Available
EAN	8050141343353
Height [mm]	41
Bolt Hole Circle Ø [mm]	108
Number of Holes	5
Minimum thickness [mm]	9
Brake Disc Thickness [mm]	11
Brake Disc Type	11
Bore Ø [mm]	64
Surface	Coated

OEM

Brand	Reference
FORD	2196429
FORD	JX612A315AEA

AM

Brand	Reference
ATE	24011101921
BOSCH	0 986 479 F78
BREMBO	08.D864.11
BREMSI	CD9022S
CAR	142.2056
DELPHI	BG5297C
FERODO	DDF3022C
JURID	563665JC
KRUPP	DDF3022C
REMSA	62522.00
SIGMAUTO	DBD022S
TEXTAR	92303503
TRW	DF6556
ZIMMERMANN	250.1316.20
ZIMMERMANN	250131600
ZIMMERMANN	250131650
ZIMMERMANN	250131652

Matec è un marchio registrato di FRENAUTO S.R.L. | P.IVA IT01706490388