MATEC

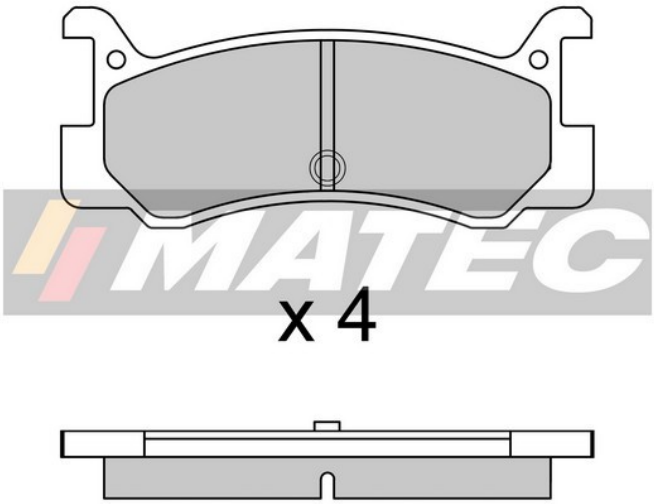

BP2328 **FRENANTE**

Pastiglie Freno

Descrizione	B. PADS MAZDA, DAIHATSU
Disponibilità	Disponibile
EAN	8050141002748
Altezza [mm]	42,1
Lunghezza [mm]	101,7
Spessore [mm]	13
N° WVA	20008
Sistema frenante	AKEBONO

OEM

Marchio	Riferimento
DAIHATSU	04492-87705
DAIHATSU	04492-87706
DAIHATSU	04492-87706-000
DAIHATSU	04492-87707
DAIHATSU	04492-87707-000
DAIHATSU	04492-87708
DAIHATSU	04492-87708-000
FORD USA	B107-49-280
MAZDA	B107-26-43Z
MAZDA	B107-26-48Z
MAZDA	B107-49-480
MAZDA	B6Y3-26-43Z
MAZDA	B6Y3-26-43ZA
MAZDA	B6Y3-26-48
MAZDA	B6Y3-26-48Z
MAZDA	B6Y3-26-48ZA
MAZDA	BL78-26-43Z
MAZDA	BL78-26-48Z
MERCURY	B107-49-280

AM

Marchio	Riferimento
A.B.S.	36607
AISIN	SN742
AKEBONO	AN-209K
ASHIKA	51-03-303
ATE	13.0460-5824.2
ATE	605824
BENDIX	510711
BENDIX	572162B
BORG & BECK	BBP1540
BOSCH	0 986 460 080
BREMBO	P 49 005
BREMSI	BP2328
DELPHI	LP521
DON	NDB164
DOYEN	GDB0375
E.T.F.	12-0328
E.T.F.	12-0602
FERODO	FDB482
FIRST LINE	3160
FREN-J	420781
FTE	BL1002A1
GIRLING	6103759
HELLA	T0025
HELLA PAGID	T0025

HP (ZEBRA)	HP2480
ICER	180621
IWIS	ABP05378
JAPANPARTS	PP-303AF
JAPKO	51303
JURID	572162J
LEADER PARTS	2030440.1
LUCAS	GDB375
LUCAS CAV	GDB375
LUCAS DIESEL	GDB375
LUCAS ELECTRICAL	GDB375
LUCAS ENGINE DRIVE	GDB375
LUCAS TVS	GDB375
LÖBRO	31291
MAGNETI MARELLI	BP0817
METALFREN	00258
MGA	MGA258
MINTEX	MDB1358
MK Kashiyama	D3031
MK Kashiyama	D3065
MOPROD	MDP0482
Mando	MBF010276
NECTO	FD6347A
NK	223215
OPTIMAL	9438
OSSCA	14838
PAGID	T0025
QH Benelux	BP560
QUINTON HAZELL	BP560
R BRAKE	RB0621
RED LINE	27DA007
REMSA	2213.00
RIDEX	402B0655
ROADHOUSE	2213.00
ROULUNDS RUBBER	420781
SIGMAUTO	SPA328
SIMER	392
SPIDAN	31291
TEXTAR	20008 130 0 4 T4067
TEXTAR	2000801
TRISCAN	8110 50880
TRUSTING	398.0
TRW	GDB375
TRW / KETNER	GDB375
TRW Engine Component	GDB375

VALEO	551601
VALEO	551601
VALEO	551601
VALEO	551601
Valeo	551601
WOKING	313300

Matec è un marchio registrato di FRENAUTO S.R.L. | P.IVA IT01706490388